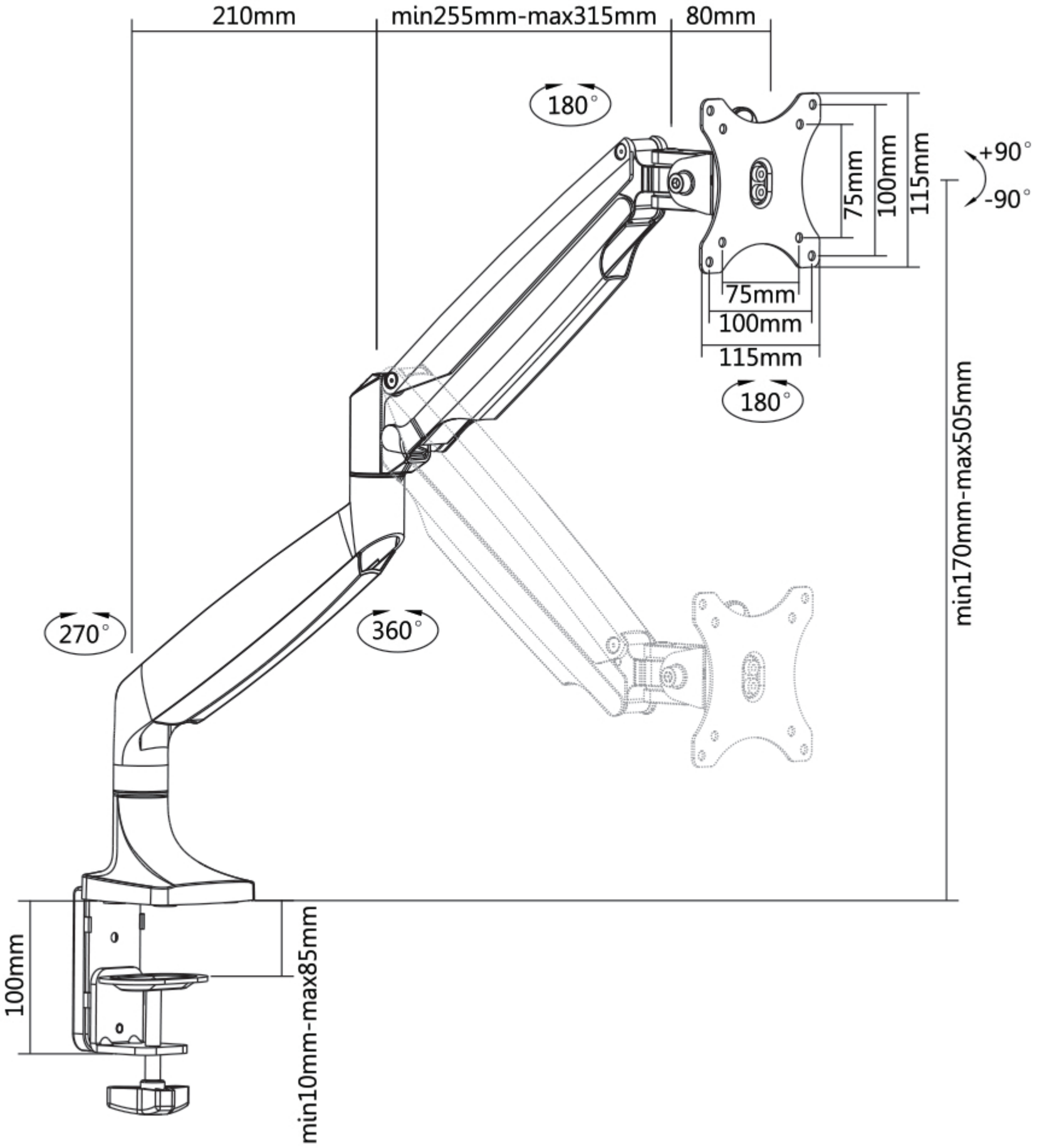
210mm
min255mm-max315mm
80mm
180°
+90°
-90°
75mm
100mm
115mm
75mm
100mm
115mm
180°
min170mm-max505mm
270°
360°
100mm
min10mm-max85mm