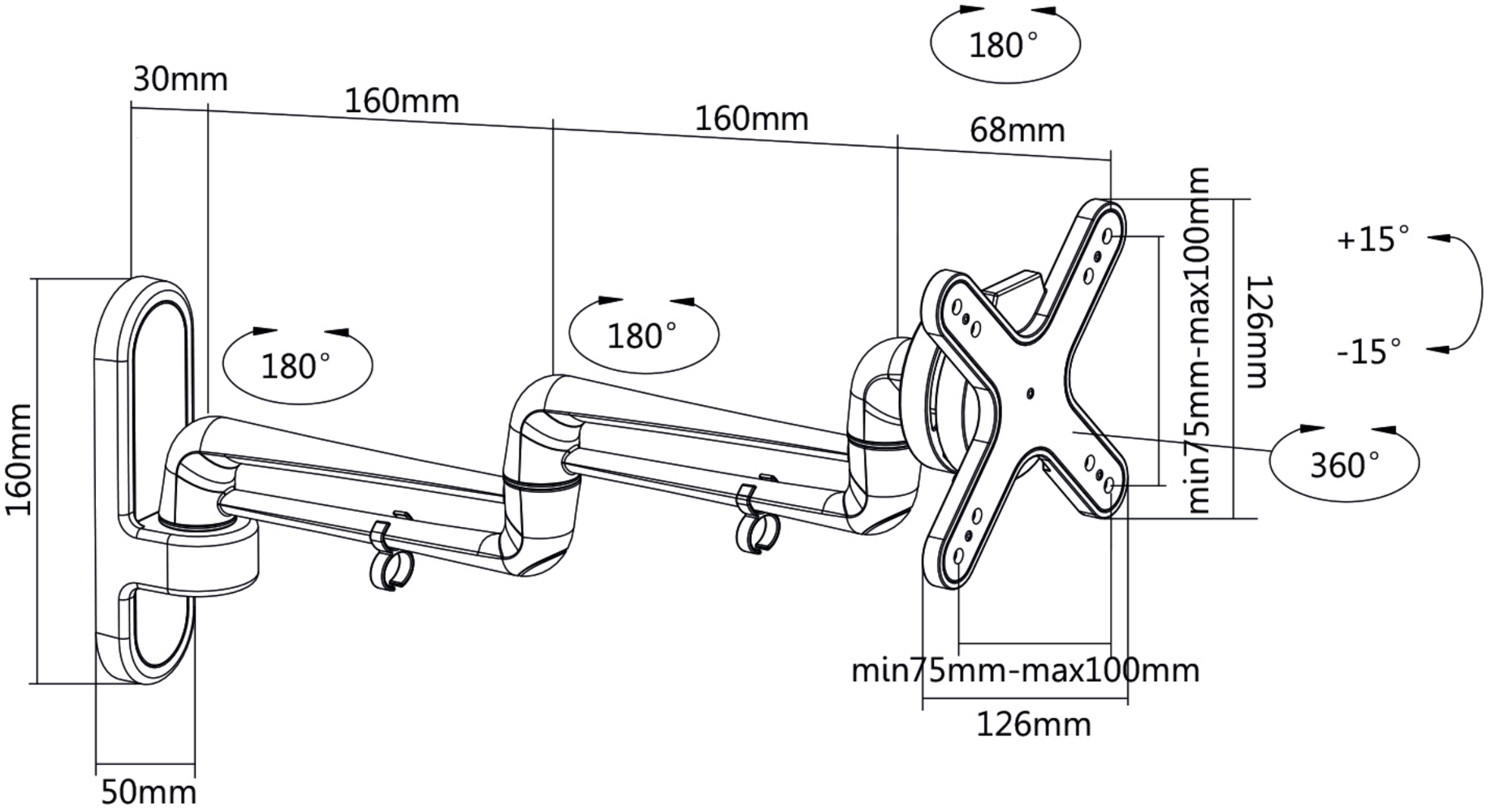
180°
30mm
160mm
160mm
68mm
+15°
-15°
126mm
min75mm-max100mm
180°
180°
360°
160mm
min75mm-max100mm
126mm
50mm