6V_6214U_50_HTV_EU_240x159_MT5596_v0.3_20210712

	PART	COLOUR	TECHNIQUE	CHANGES / REMARKS	V
I	PHILIPS LOGO	Cool Grey 3C	SILKSCREEN PRINTING	ON HIGH GLOSS SURFACE	00
J	STICKER AREA		INMOLDED	ON POLISHED SURFACE	00
K	ALL TEXTS, ICON AND CAUTION LABELS		ENGRAVED	ENGRAVED 0.3 (DEPTH 0.3 MM)	00

LABEL DOWN IO TEXT FONTS: CentraleSansCnd Bold 10pt
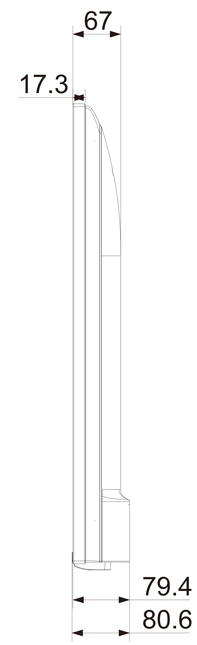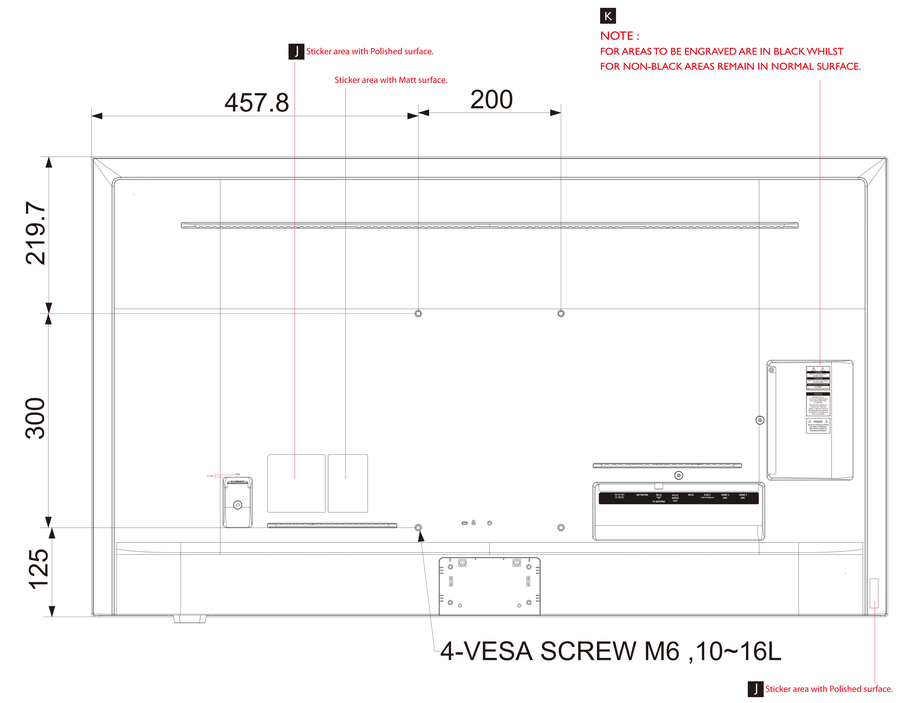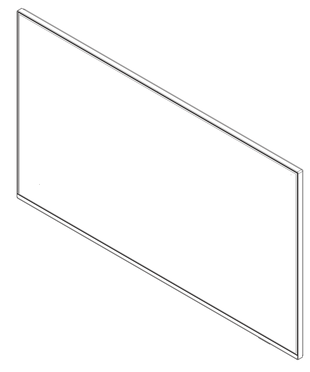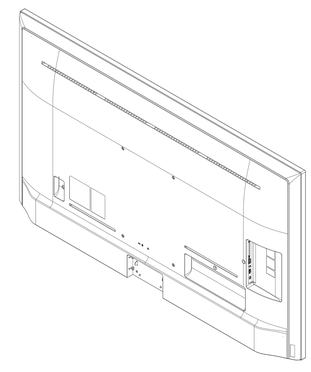
LABEL SIDE IO TEXT FONTS: CentraleSansCnd Bold 10pt